GENERAL NOTES:

1. SCOPE OF WORK: The Contractor shall furnish all labor, machinery, tools, supplies, and equipment as necessary to construct and provide an operating system, as indicated in the Plans. The work shall include, but not be limited to, furnishing materials (pipe, valves, sprinkler heads, fittings, controllers, electrical, wire and fittings, primer, glue, etc.), layout, protection to the public, excavation, assembly, installation, backfilling, compaction, repair of road or pavement surfaces, controller and low voltage feed to the valves, clean-up, maintenance and guarantee, and as-built plans.

2. Contractor shall coordinate with General Contractor or other pertinent Contractors on the job to insure that sleeves are provided and installed under hard surfaces to allow access to all areas to be irrigated. All sleeves shall be constructed of Class 200 PVC. Bury all sleeves a minimum of 18" below the surface. Sleeve to be double the size if the pipe running through it. Sleeve shall extend 24" past the edge of pavement into the area to be irrigated.

3. GUARANTEE: The irrigation system shall be guaranteed for a minimum of one calendar year from the time of final acceptance.

4. REPAIR UTILITIES: The Contractor shall be responsible to verify the location of all utilities by hand excavation or other appropriate measures before performing any work that may result in damage to utilities structures, or property. The Contractor shall take immediate steps to repair, replace, or restore all services to any utilities which are disrupted due to his operations. All costs involved in disruption of service and repairs due to negligence on part of the Contractor shall be his responsibility.

5. AS-BUILT DRAWINGS: Prints of the plans will be supplied to the Contractor for recording "as-built" information. Immediately upon installation of any work which deviates from what is shown on the Plans, the Contractor shall clearly indicate such changes in red pencil on the prints. Such changes shall include, but not be limited to, changes in (1) materials; (2) sizes of material; (3) location; and (4) quantities.

6. The entire installation shall fully comply with all applicable local and state codes and ordinances. The Contractor shall take out all required plumbing and electrical applications and permits, arrange for all necessary inspections and shall pay all fees and expenses in connection with same as part of work under the contract.

7. UNIT PRICES: The successful bidder shall furnish, to the Owner, a unit price breakdown for all materials. The Owner may at his own discretion, add to or delete from the materials, using the unit price breakdown submitted to and accepted by the Owner.

8. MAINTENANCE PERIOD: The irrigation system shall be maintained for a period of 90 days after final acceptance of installation. Maintenance shall include checking of the system 2 times per week. Contractor shall be responsible to replace/repair any broken or malfunctioning parts of the system including those damaged by accidents or vandalism. Repairs shall be made immediately at the time of inspection or when notified by the Landscape Architect.

9. The irrigation system shall provide 100% coverage with a minimum of 90% overlap of water spray.

10. The system is design to provide sprinkler precipitation rates that are nearly equal in each zone. Mixing of sprinklers with widely varying precipitation rates in a zone will not be accepted.

11. Irrigation mainline shall be made of Class 200 PVC and all laterals shall be Class 200 PVC, except flexible PVC (or Toro funny pipe) for flexible swing joint and Schedule 40 PVC risers for spray heads in shrub areas. Schedule 80 galvanized steel pipe is to be used for all above ground fittings. Pipe locations shall be adjusted in the field. When laying out mains and laterals, locate pipe near edges of pavement or against buildings wherever possible, to allow space for plant rootballs. Coordinate pipe locations with plantings. Bury all mains and laterals 18" min. below surface. Depth shall be measured to top of pipe.

12. Keep pop-up sprinkler heads a minimum of 8" from edges of pavement and curbing, and heads on risers a minimum of 18", or as indicated in the pans.

13. All heads located in shrub or groundcover beds shall be installed on a riser as per details in the plans. All other heads shall be installed on a swing joint as per details in the plans.

14. Place irrigation control wire in conduit in the same trench as mains and under the main. ASI wire shall be #14 or larger solid copper U.L. approved underground direct burial cable and shall be continuous with no splices from controller to solenoid valve.

15. Valve locations are schematic and shall be adjusted in the field. Each valve shall be in a separate valve box (10" x 16") min.). When grouping valve boxes in grass or groundcover areas, set boxes a minimum of 12" apart to allow grass or groundcover to grow between them. When possible, hide valve boxes in shrub beds, a minimum of 12" from edge of beds. Set all valve boxes, concrete or plastic, in ground with cover flush with finish grade, and level, with a minimum of 6" of pea gravel at the bottom of the box, with at least 2" of clearance from the bottom of the valve to the top of the gravel.

16. TESTING: Notify the Landscape Architect in writing when testing will be conducted. Conduct test in the presence of the Landscape Architect. After all PVC assembly is completed the lines shall be flushed to insure that no rocks, sand, or other foreign debris remains in the lines. The mains shall be filled with water and all outlets shall be capped and plugged. The main shall be pressurized to 100 PSI for a minimum of one hour. No section of the main will be approved if the pressure drops more than 5 PSI at the end of the one hour period. Leaks shall be repaired immediately and the system shall be re-tested until found satisfactory by the Landscape Architect.

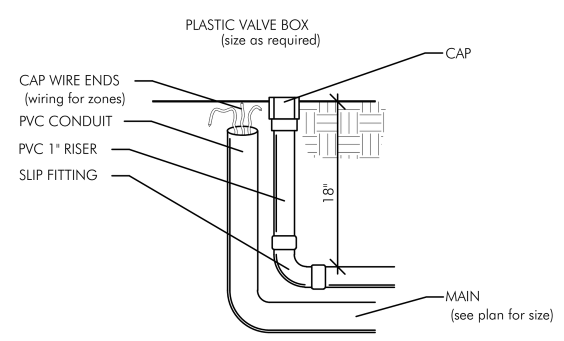

DETAIL OF STUB-OUT FOR FUTURE USE

N.T.S.

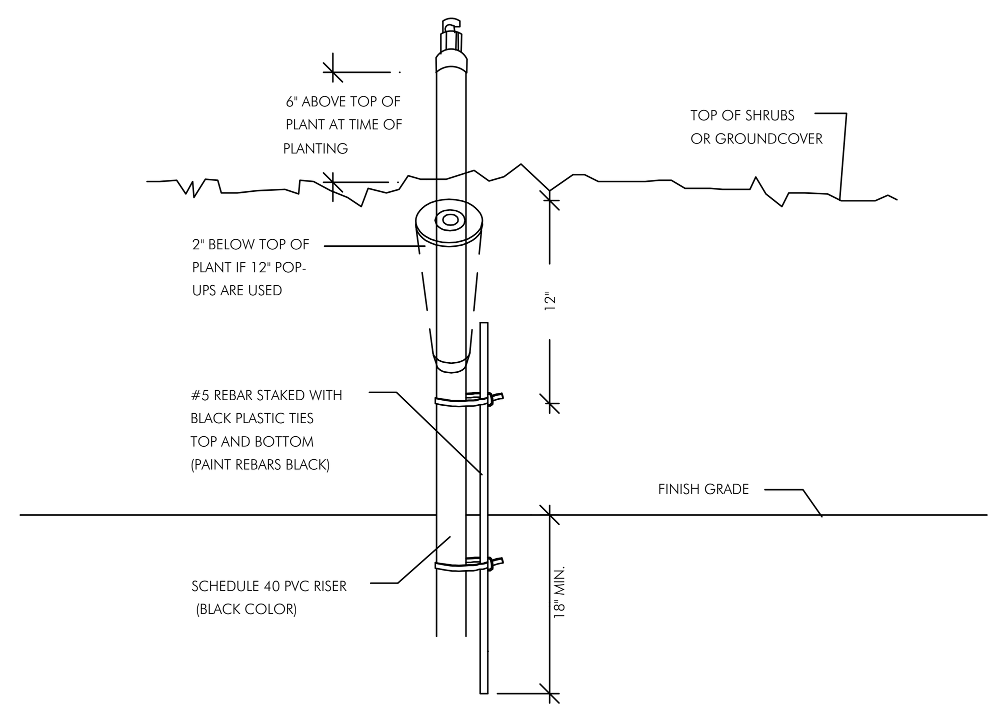

SPRINKLER ON RISER DETAIL FOR SHRUB AREAS

N.T.S.

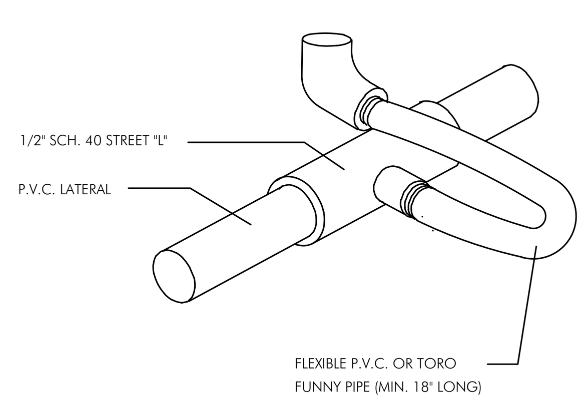

FLEXIBLE SWING JOINT DETAIL

N.T.S.

NOTE:
ALL WIRE CONNECTIONS SHALL BE APPROVED WATERTIGHT CONNECTIONS.
FINISH ENTIRE ASSEMBLY, EXCEPT FOR EQUIPMENT, WITH FLAT BLACK ACRYLIC ENAMEL PAINT.
PRIME METALLIC SURFACES WITH ZINC CHROMATE PRIOR TO FINISHING.

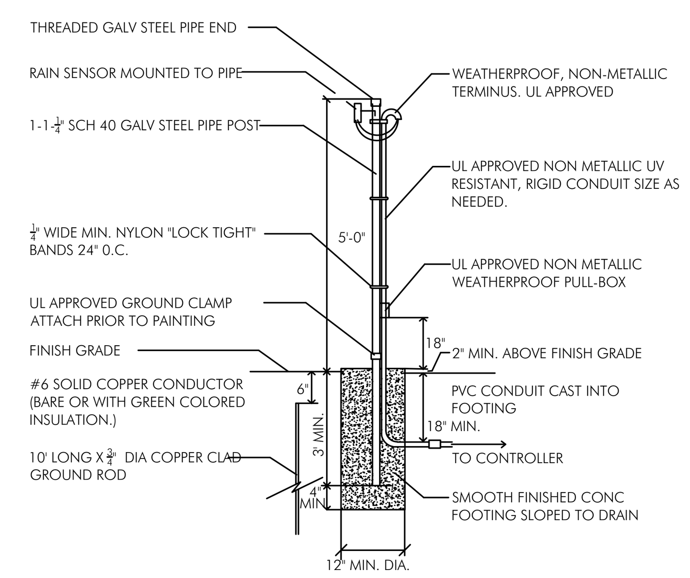

RAIN SENSOR DETAIL

N.T.S.

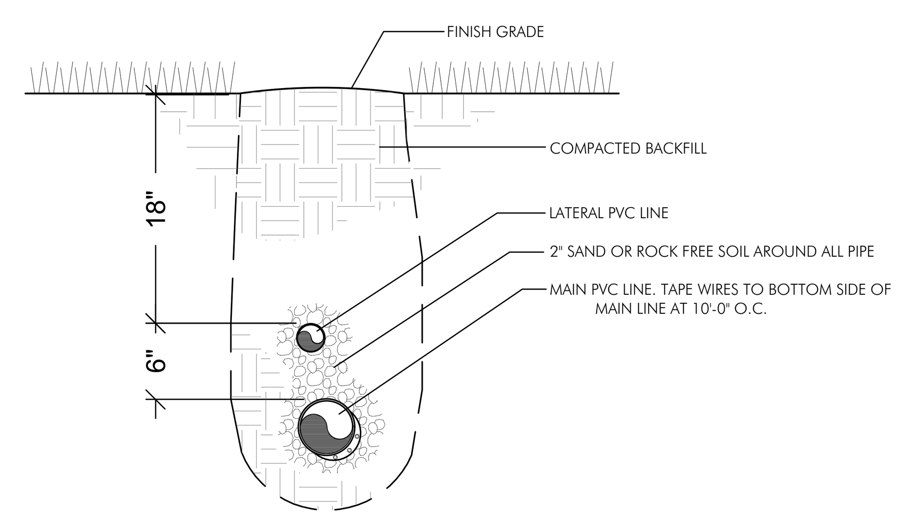

TRENCH DETAIL

N.T.S.

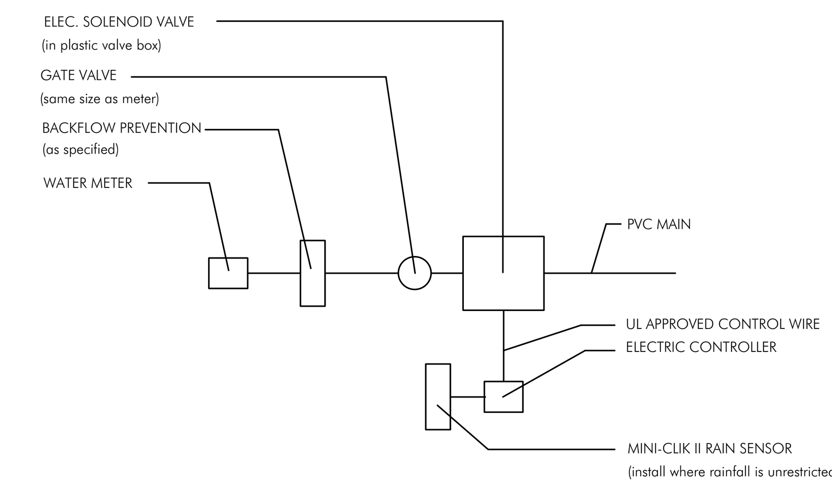

CONNECTION TO METER DETAIL

N.T.S.

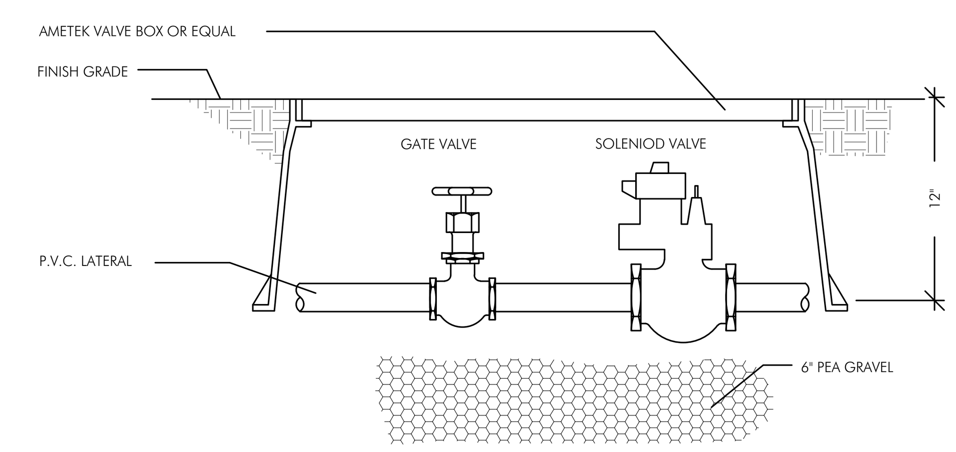

TYPICAL SOLENOID VALVE ASSEMBLY

N.T.S.

LEGEND

NOTES

PROJECT, ADDRESS AND OWNER:

NORTH OCEAN PARK

3424 NE 16th St.
POMPANO BEACH, FL | 33062

PROJECT NORTH: TRUE NORTH:

DEVELOPER:

Duet Property Development LLC
250 NE 25TH St. #203
Miami, FL 33128

LANDSCAPE ARCHITECT:
WEST 8 URBAN DESIGN & LANDSCAPE ARCHITECTURE P.C
2133 Arch St., Suite 101
Philadelphia, PA 19103
t 347-371-2252

CIVIL ENGINEER:
KEITH
301 East Atlantic Blvd.
Pompano Beach, FL 33060
t 954-788-3400

ARCHITECT:
G3AEC
975 Arthur Godfrey rd. suite 401
miami beach florida 33140
t 305-763-8471

IRRIGATION:
GSLA DESIGN, INC.
17670 NW 78th Avenue, Suite 214
Miami, FL 33015
t 305-392-1016

No.	DESCRIPTION:	DATE:
1	DRC APPLICATION	06/11/2024
2	DRC APPLICATION REV.1	11/13/2024

NOT FOR CONSTRUCTION

Discrepancies must be reported immediately to the Architect before proceeding. Only figured dimensions are to be used.
Contractors must check all dimensions on site.

CONSULTANT:
GSLA DESIGN, INC.
17670 NW 78th Avenue, Suite 214
Miami, FL 33015
t 305-392-1016

DRAWING TITLE: SCALE:

IRRIGATION SPEC & DETAILS

SHEET No.:

790-L-601

SEAL:

REGISTERED LANDSCAPE ARCHITECT KENNETH ERIC GARDNER LA 0001569 STATE OF FLORIDA

Printed copies of this document are not considered signed and sealed and the signature must be verified on any electronic copies

Digitally signed by Ken Gardner
DN: c=US, st=Florida, serialNumber=AATL20240208335601, o=GSLA Design, cn=Ken Gardner, email=ken@gsladesign.com
Date: 2024.11.12 16:09:10 -05'00'

SIGNATURE:

All drawing and written materials herein constitute original work of the architect and may only be duplicated with their written consent.

DRC
PZ22-12000012
12/18/2024